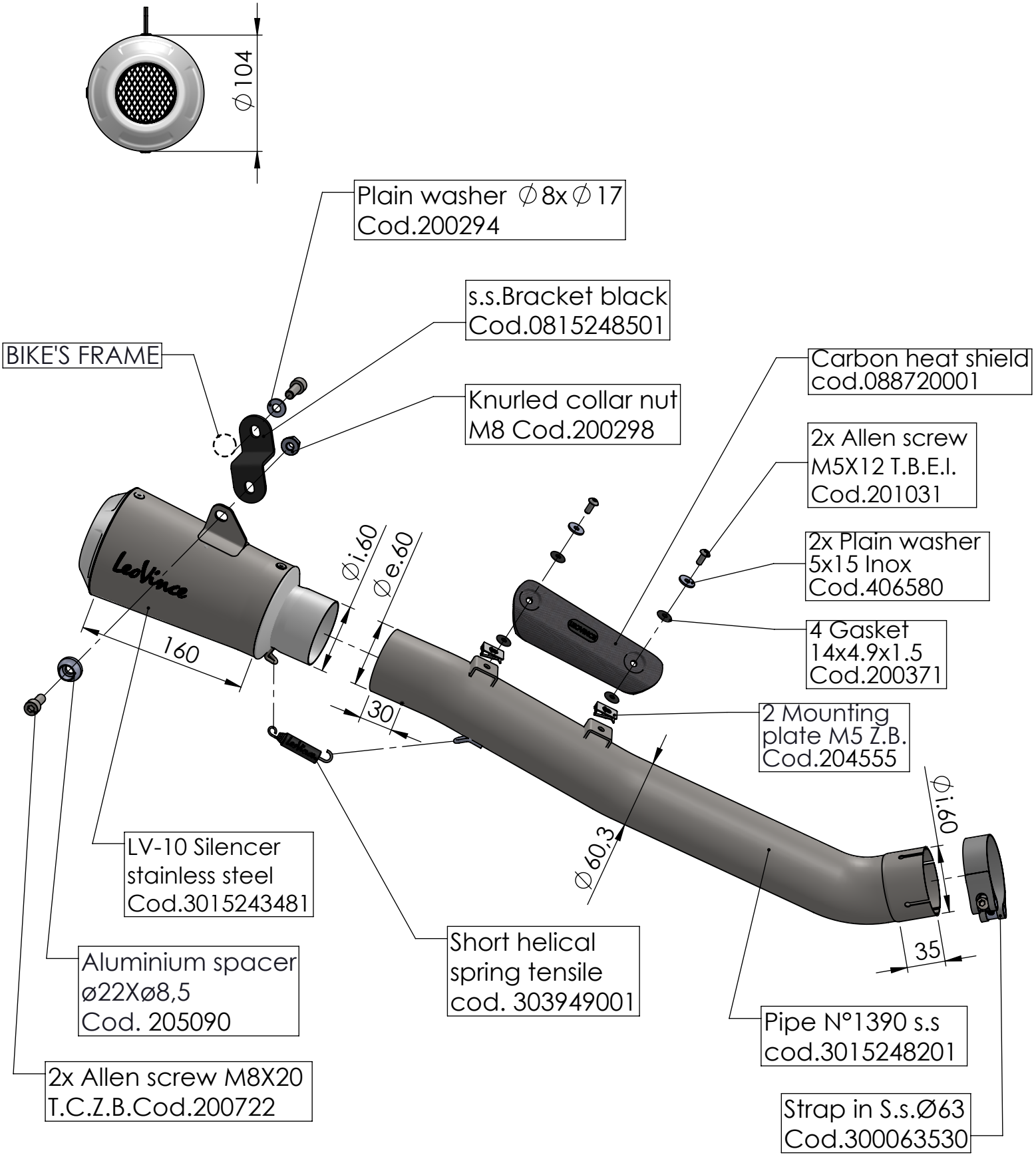

ART. 15248

APRILIA RSV4 1100 / FACTORY - TUONO V4 1100 / FACTORY

SLIP-ON - LV-10 - STAINLESS STEEL